CSG60K6000

Gate Turn-off Thyristor

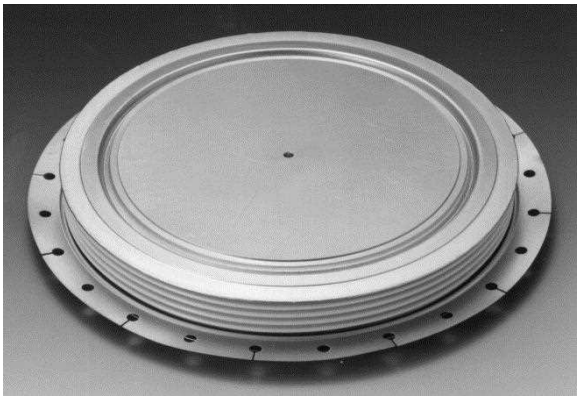

- Asymmetric capsule type thyristor
- I_{TQRM} :Repetitive controllable on state current….6000A
- $I_{T(AV)}$: Average on-state current….....2000A
- V_{DRM} :Repetitive peak off state voltage.....6000V
- V_{RRM} :Repetitive peak reverse voltage..... 22V

APPLICATION

High Voltage Inverter / DC Chopper / Induction Heating / DC - DC Converter

OUTLINE AND DIMENSION

Dimensions in mm

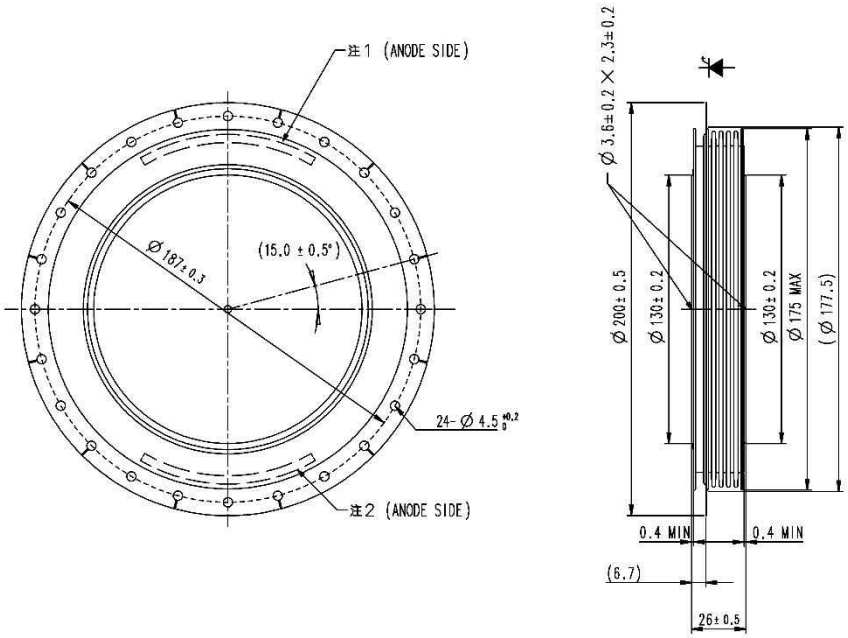

GTO CHARACTERISTICS

Symbol	Parameter	Test Conditions	Value	Unit
V_{RRM}	Repetitive peak reverse voltage	-	22	V
V_{RSM}	Non-repetitive peak reverse voltage	-	22	V
V_{DRM}	Repetitive peak off state voltage	V_{GK}=-2V	6000	V
V_{DSM}	Non-repetitive peak off state voltage	V_{GK}=-2V	6000	V
V_{LTDS}	Long term DC stability voltage	V_{GK}=-2V, λ=100Fit	3200	V

Symbol	Parameter	Test Conditions	Value	Unit
I_{TQRM}	Repetitive controllable on state current	V_{DM}=5500V, V_D=3000V, Tj=25/125 ºC Cc=6μF, Lc=0.4μH, V_{RG}=21V di_{GQ}/dt=10000A/μs (See Fig.1,2)	6000	A
$I_{T(RMS)}$	RMS on-state current	Applied for all condition angles f=60Hz,sinewave θ=180°, Tf=88 ºC	3100	A
$I_{T(AV)}$	Average on-state current		2000	A
I_{TSM}	Surge on-state current	One half cycle at 60Hz, Tj=125 ºC Start	50	kA
I^2t	Current-squared, time integration		10.4×10^6	A^2s
di_T/dt	Critical rate of rise of on state current	I_T=6000A, V_D=3000V, I_{GM}=300A di_G/dt=200A/μs, Tj=25/125 ºC (See Fig.1,2)	1000	A/μs
V_{FGM}	Peak forward gate voltage		10	V
V_{RGM}	peak reverse gate voltage		22	V
I_{FGM}	Peak forward gate current		1500	A
I_{RGM}	Peak reverse gate current		6000	A
P_{FGM}	Peak forward gate power dissipation		15	kW
P_{RGM}	Peak reverse gate power dissipation		180	kW
$P_{FG(AV)}$	Average forward gate power dissipation		300	W
$P_{RG(AV)}$	Average reverse gate power dissipation		900	W
Tj	Operation junction temperature		-40~125	°C
Tstg	Storage temperature		-40~150	°C
—	Mounting force required	(Recommended value 108 kN)	98 ~ 118	kN
—	Weight	Typical value 3700g	—	g

Symbol	Parameter	Test Conditions	Value			Unit
			Min	Typ	Max	
V_{TM}	On-state voltage	I_T=6000A, Tj=125 ºC	—	—	4	V
I_{RRM}	Repetitive peak reverse current	V_{RM}=22V, Tj=125 ºC	—	—	100	mA
I_{DRM}	Repetitive peak off state current	V_{DM}=6000V, V_{GK}=-2V, Tj=125 ºC	—	—	150	mA
I_{GRM}	Reverse gate current	V_{RG}=22V, Tj=125 ºC	—	—	100	mA
dv/dt	Critical rate of rise of off state voltage	V_D=3000V, V_{GK}=-2V, Tj=125 ºC (Expo. wave)	3000	—	—	V/μs
tgt	Turn-on time	I_T=6000A, V_D=3000V, di/dt=1000A/μs I_{GM}=300A, di_G/dt=200A/μs, Tj=125ºC (See Fig.1,2)	—	—	3	μs
td	Turn-on delay time		—	—	1	μs
Eon	Turn-on switching energy	I_T=2800A, V_D=3000V, di/dt=1000A/μs I_{GM}=300A, di_G/dt=200A/μs, Tj=125ºC (See Fig.1,2)	—	—	2.0	J/P
ts	Storage time	I_T=6000A, V_{DM}=5500V, V_D=3000V Tj=125 ºC, Cc=6μF, Lc=0.4μH, V_{RG}=21V di_{GQ}/dt=10000A/μs (See Fig.1,2)	—	—	3	μs
Eoff	Turn-off switching energy	I_T=2800A, V_{DM}=4300V, V_D=3000V Tj=125 ºC, Cc=6μF, Lc=0.4μH, V_{RG}=21V di_{GQ}/dt=10000A/μs (See Fig.1,2)	—	—	20	J/P
I_{GT}	Gate trigger current	V_D=24V, R_L=0.1Ω, Tj=25 ºC DC method	—	—	8	A
V_{GT}	Gate trigger voltage		—	—	1.5	V
Rth(j-f)	Thermal resistance	Junction to Fin	—	—	0.0044	K/W

CURVES

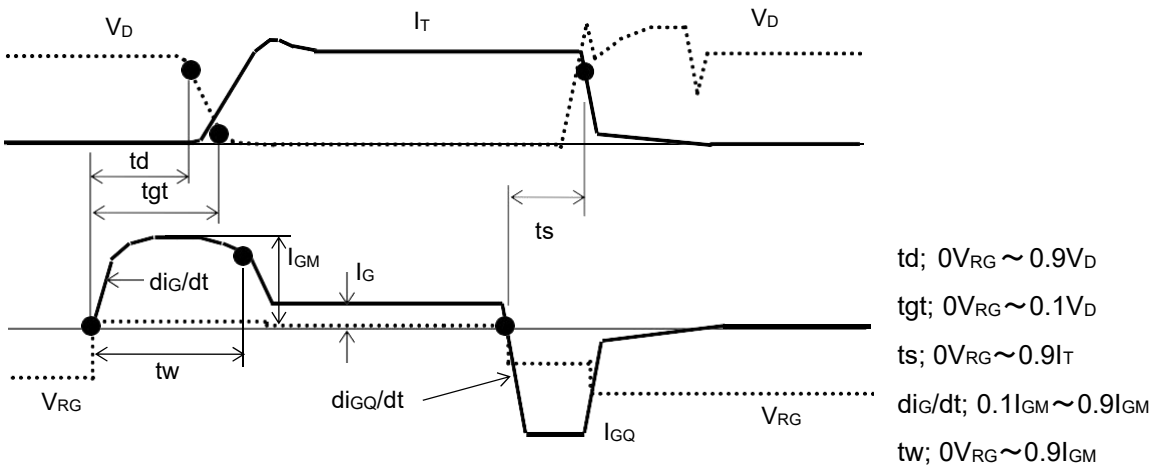

Fig.1:Turn on and turn off waveform

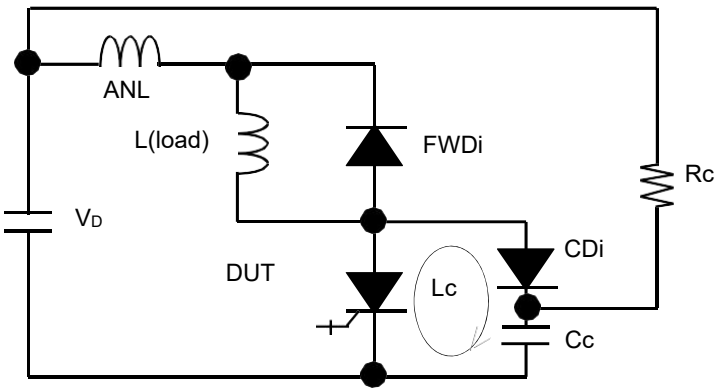

Fig.2:Turn-on and turn-off test circuit (With clamp circuit)

CURVES

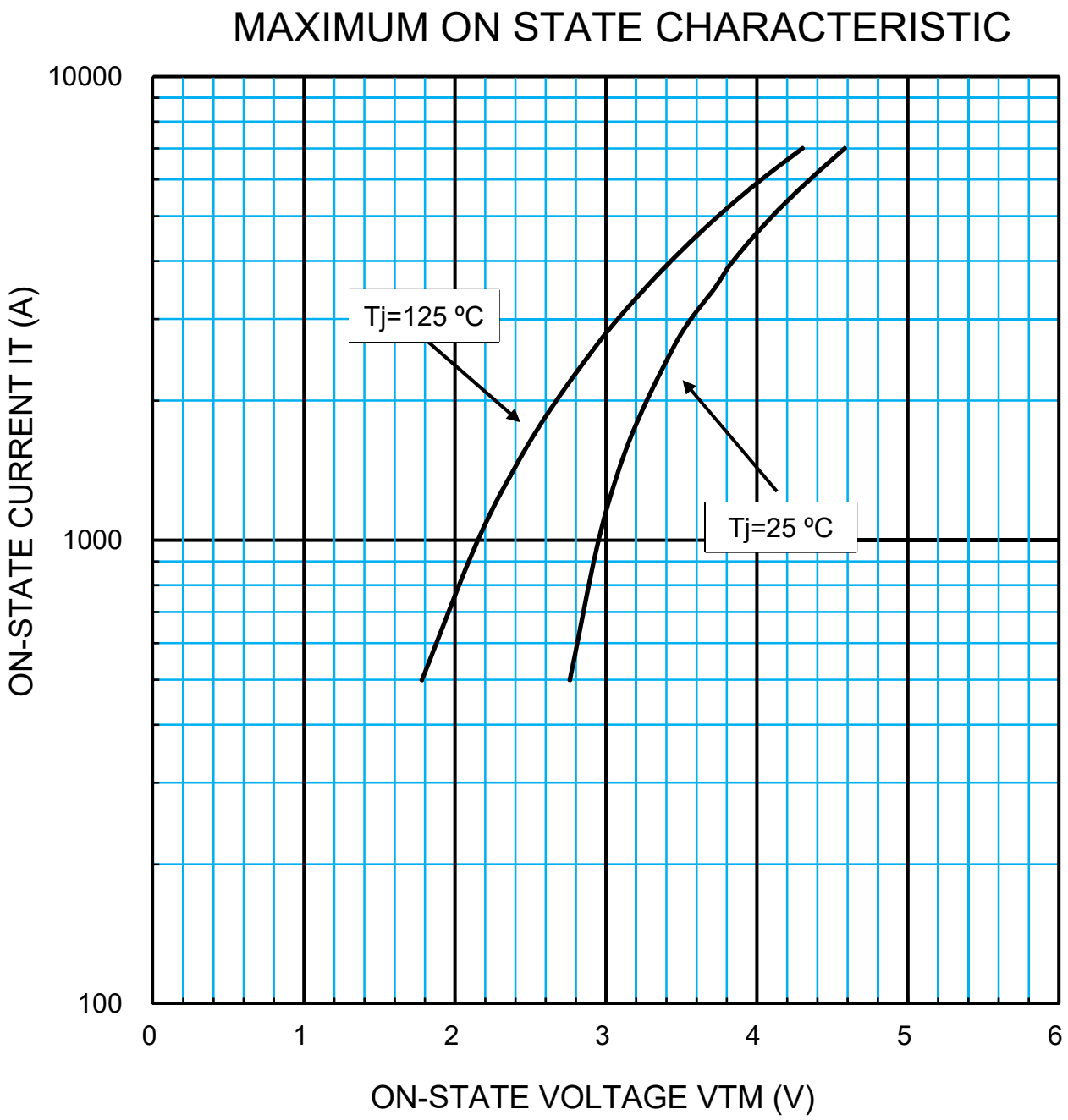
MAXIMUM ON STATE CHARACTERISTIC
10000
1000
100
ON-STATE CURRENT IT (A)
Tj=125 ºC
Tj=25 ºC
0
1
2
3
4
5
6
ON-STATE VOLTAGE VTM (V)

CURVES

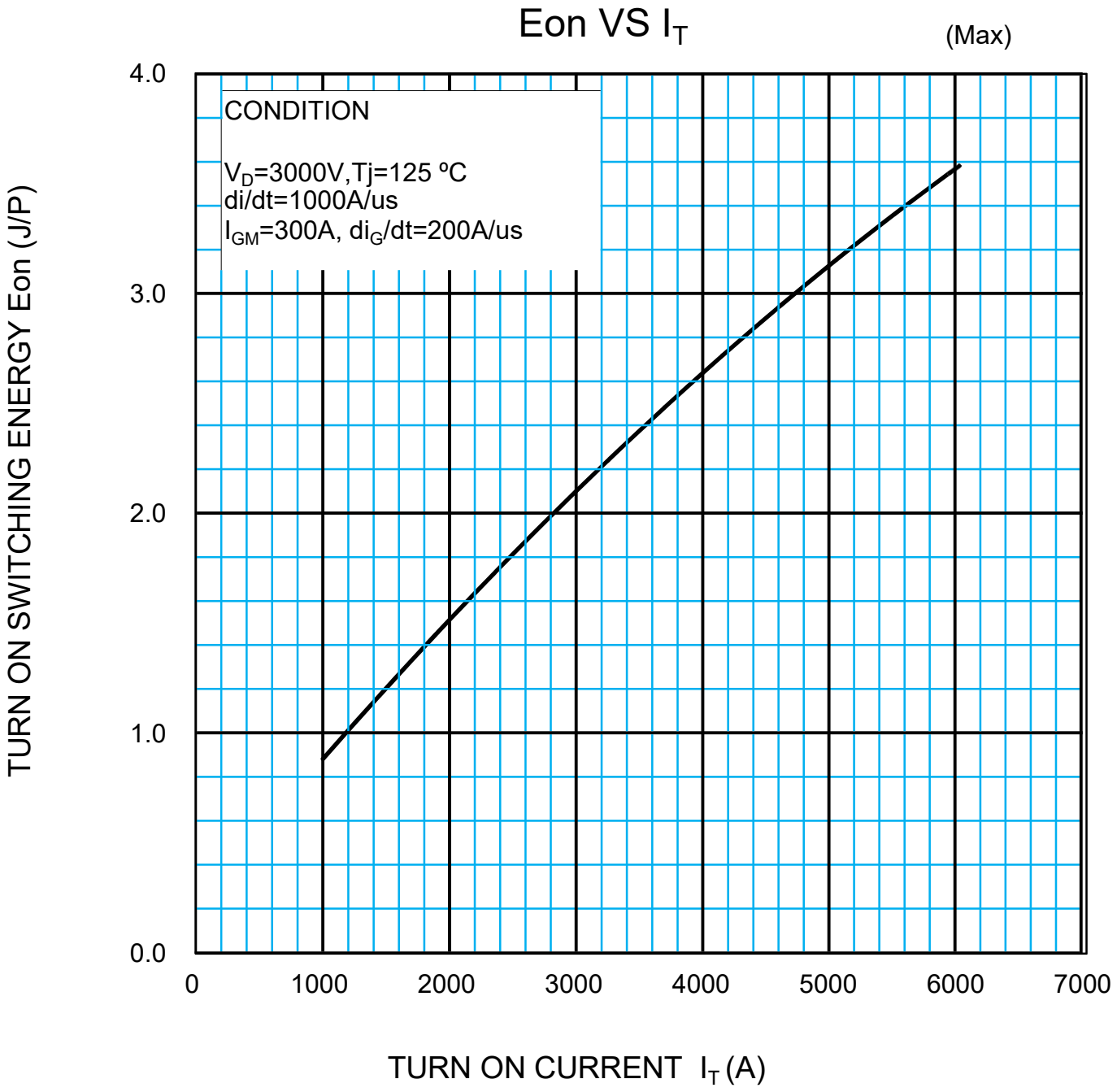
Eon VS I_T
(Max)
CONDITION
V_D=3000V,Tj=125 ºC
di/dt=1000A/us
I_{GM}=300A, di_G/dt=200A/us
TURN ON SWITCHING ENERGY Eon (J/P)
4.0
3.0
2.0
1.0
0.0
0
1000
2000
3000
4000
5000
6000
7000
TURN ON CURRENT I_T (A)

CURVES

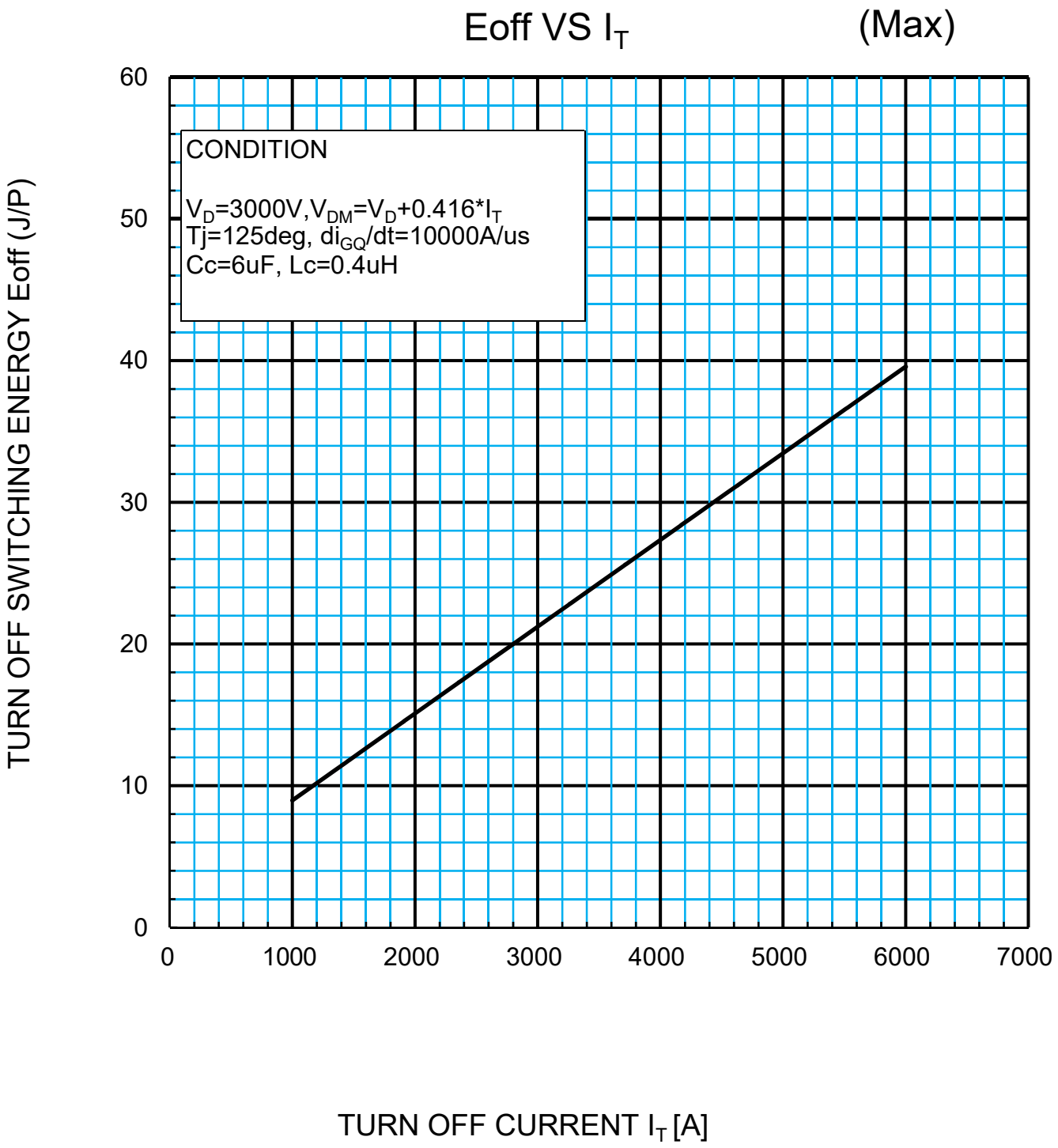
Eoff VS I_T
(Max)
CONDITION
V_D=3000V,V_{DM}=V_D+0.416*I_T
Tj=125deg, di_{GQ}/dt=10000A/us
Cc=6uF, Lc=0.4uH
TURN OFF SWITCHING ENERGY Eoff (J/P)
0
10
20
30
40
50
60
0
1000
2000
3000
4000
5000
6000
7000
TURN OFF CURRENT I_T [A]

CURVES

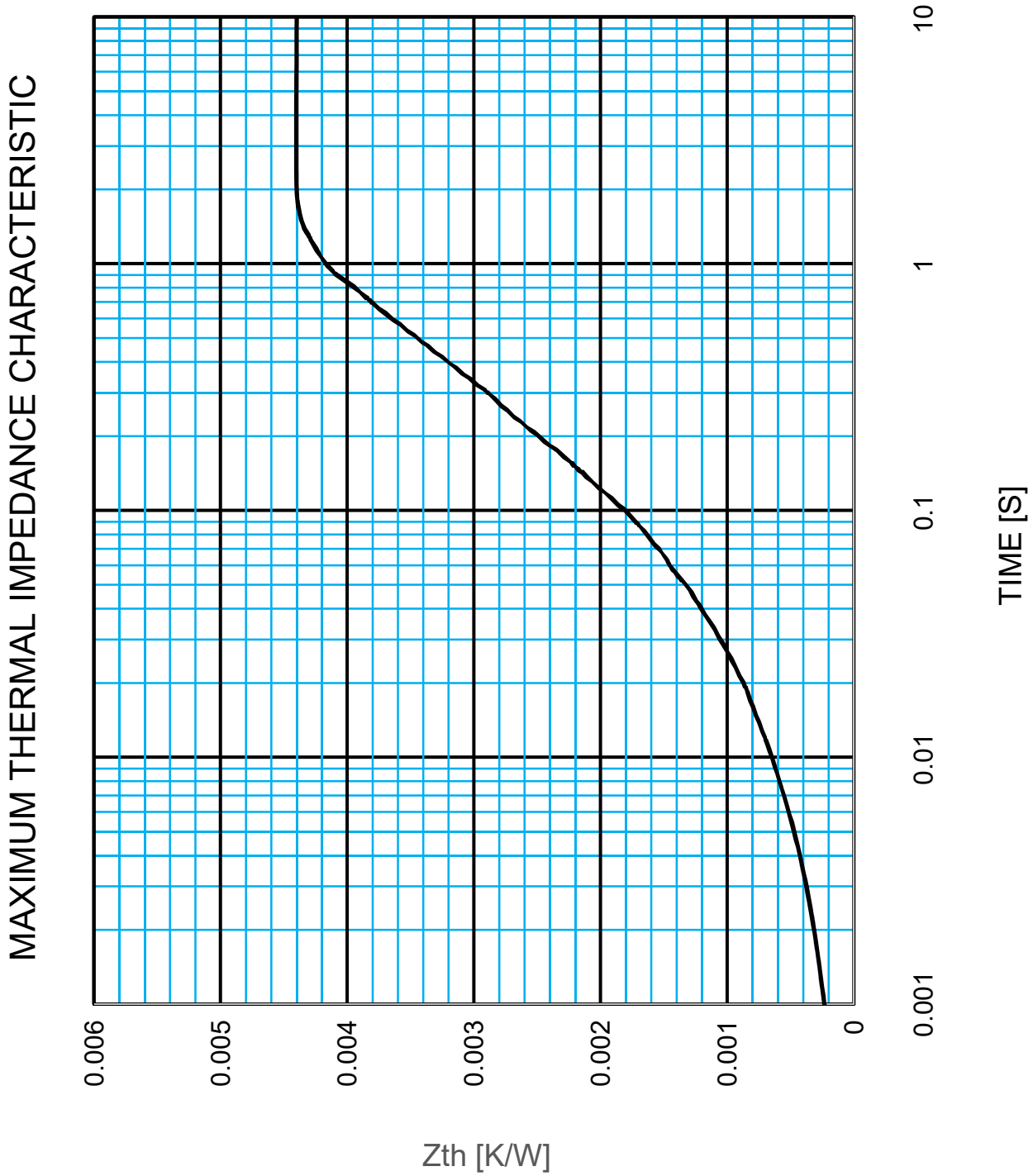
MAXIMUM THERMAL IMPEDANCE CHARACTERISTIC
0.006
0.005
0.004
0.003
0.002
0.001
0
Zth [K/W]
0.001
0.01
0.1
1
10
TIME [S]